Roll No. .....

TEC–401

B. TECH. (ECE) (FOURTH SEMESTER)

END SEMESTER EXAMINATION, June, 2023

COMMUNICATION SYSTEMS I

Time : Three Hours

Maximum Marks : 100

Note : (i) All questions are compulsory.

(ii) Answer any *two* sub-questions among (a), (b) and (c) in each main question.

(iii) Total marks in each main question are **twenty**.

(iv) Each sub-question carries 10 marks.

1. (a) Derive an expression for a single tone amplitude modulated wave.(CO1)

(b) (i) Show that a signal and its Hilbert transform have the same energy content.

(ii) Calculate the percentage power saving when the carrier and one of the sidebands are suppressed in an AM wave modulated to a depth of (a) 100 percent and (b) 50 percent. (CO1)

(c) Explain the modulation and demodulation of VSB ware using filter method with the help of a neat block diagram. (CO1)

P. T. O.

2. (a) An angle modulated signal with carrier frequency $\omega_c = 2\pi \times 10^5$ is described by the equation $x(t) = 10\cos(\omega_c t + 5\sin 300\pi t + 10\sin 2000\pi t)$.

(i) Find the power of the modulated signal.

(ii) Find the frequency deviation.

(iii) Find the deviation ratio.

(iv) Find the phase deviation.

(v) Estimate the bandwidth of $x(t)$. (CO2)

(b) Explain with necessary mathematical relations, the demodulation of an FM wave using PLL. (CO2)

(c) Explain, with the help of block diagram, the Armstrong method of generating FM signal. (CO2)

3. (a) Find the power spectral density of the thermal noise voltage across terminal 1,2 of a passive network shown in figure below. (CO3)

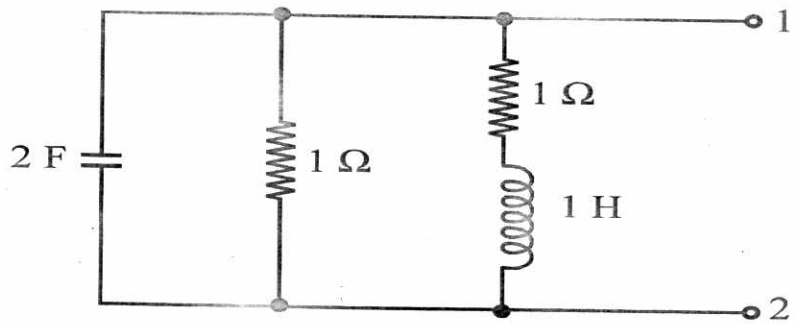

(b) Derive an expression for the Friis's noise figure formula. (CO3)

(c) Show that the rms value of the thermal noise voltage that appears across the capacitor in a parallel R – C circuit is given by $\sqrt{\frac{kT}{C}}$. (CO3)

4. (a) Show that in an FM system the figure of merit, assuming sinusoidal modulation, is given by $\gamma_{FM} = \frac{3}{2} m_f^2$, where f is the modulation index for FM. (CO4)

(b) What is pre-emphasis ? Why is it used ? Sketch a typical pre-emphasis circuit and explain why de-emphasis must be used also. (CO4)

(c) Assuming sinusoidal modulation, show that in an AM system with envelope detection the figure of merit is given by $\gamma_{AM} = \frac{\mu^2}{2+\mu^2}$, where μ is the modulation index for AM. (CO4)

5. (a) With the help of neat circuit diagram, explain the generation and demodulation of PWM. (CO5, CO6)

(b) Describe, briefly, the pulse amplitude modulation technique. (CO5, CO6)

(c) Draw the block diagram of communication system and explain the function of each block. (CO5, CO6)

50

Roll No. .....

TEC–402

B. TECH. (ECE) (FOURTH SEMESTER)

END SEMESTER EXAMINATION, June, 2023

ANALOG INTEGRATED CIRCUITS

Time : Three Hours

Maximum Marks : 100

Note : (i) All questions are compulsory.

(ii) Answer any *two* sub-questions among (a), (b) and (c) in each main question.

(iii) Total marks in each main question are **twenty**.

(iv) Each sub-question carries 10 marks.

1. (a) The following specifications are given for the dual-input, balanced-output differential amplifier, where $R_C = 2.2\ k\Omega$, $R_E = 4.7\ k\Omega$, $R_{in1} = R_{in2} = 50\ \Omega$, $+V_{CC} = 10$ V, $-V_{EE} = -10$ V and the transistor is has $\beta_{dc} = \beta_{ac} = 100$ and $V_{BE} = 0.715$ V typical.

(i) Determine the I_{CQ} and V_{CEQ}.

(ii) Determine the voltage gain.

(iii) Determine the input and output resistances. (CO1)

(b) Discuss the significance of active load in a differential amplifier with detailed circuit description (CO1)

P. T. O.

(c) Perform AC and DC analysis of dual input unbalanced output differential amplifier with proper diagram. (CO1)

2. (a) Explain the DC characteristics of OP-AMP. (CO2)

(b) Explain the ideal integrators in detail and also mention the need of practical integrators. (CO2)

(c) Explain Voltage to Current Converter with example. (CO2)

3. (a) Explain how instrumentation amplifier is different from ordinary op-amp and explain instrumentation with linear gain control. (CO3)

(b) Design an op-amp differentiator that will differentiate an input signal with f_{max} = 100 Hz. Draw the output waveform for a sine wave of 1 V peak at 100 Hz applied to the differentiator and apply same for square wave input. (CO3)

(c) Explain Averaging Amplifier. Find the value of V_1 in the circuit shown in below : (CO3)

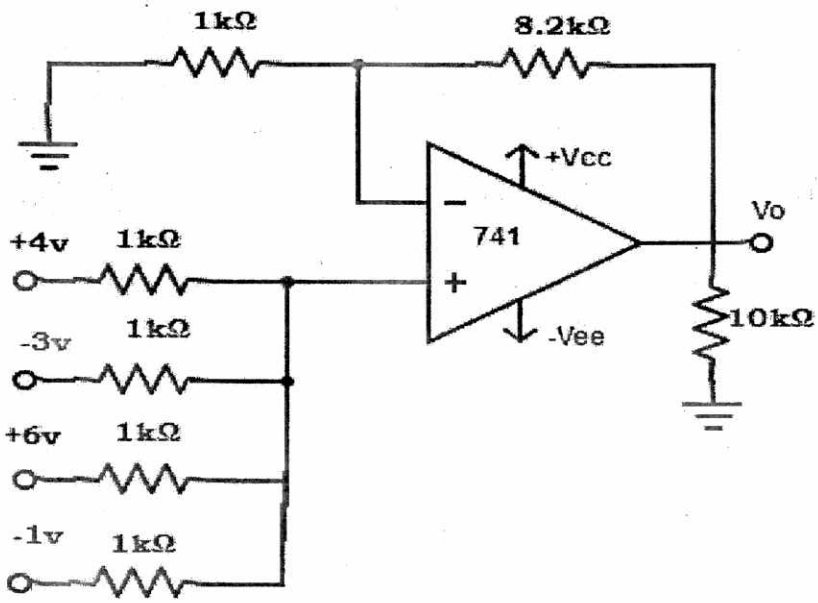

4. (a) Explain half wave and full wave rectifier with super diodes.

(CO3, CO4)

(b) Explain the compensating LOG amplifier. (CO3, CO4)

(c) Explain positive feedback comparator with positive reference. In Schmidt trigger $R_2 = 100\ \Omega$, $R_1 = 50\ \Omega$, $V_{ref} = 0$ V, $V_i = 1$ Vpp sine wave and saturation voltage = + – 10 V. Determine threshold voltages V_{UT} and V_{LT}. (CO3, CO4)

5. (a) Explain state variable filter and how it shows the various filter characteristics. (CO5, CO6)

(b) Design a 2nd order Butterworth filter using sallen key unity gain low pass filter of critically frequency 3 kHz and passband gain of 4.

(CO5, CO6)

(c) What is the function of a voltage regulator ? State advantages and disadvantages of a series regulator. Explain series OP-AMP Regulator.

(CO5, CO6)

50

Roll No. .....

TEC–403

B. TECH. (ECE) (FOURTH SEMESTER)
END SEMESTER EXAMINATION, June, 2023

MICROPROCCESSOR AND ITS APPLICATION

Time : Three Hours

Maximum Marks : 100

Note : (i) All questions are compulsory.

(ii) Answer any *two* sub-questions among (a), (b) and (c) in each main question.

(iii) Total marks in each main question are **twenty**.

(iv) Each sub-question carries 10 marks.

1. (a) Explain the concept of pipelining and segmentation in 8086. (CO4)

(b) What is stack ? When microprocessor itself use stack ? Explain with example. (CO4)

(c) Write a program for 8086 to divide 16-bit content from location 2050 with a 16-bit number at location 2060 store result at 2070. (CO4)

2. (a) Draw timing diagram of ADI 25. (CO1, CO2)

(b) Write a program to generate a delay of 10 ms in 8085. (CO1, CO2)

(c) Write a program in 8085 to find cube of a 8-bit number. (CO1, CO2)

P. T. O.

3. (a) Explain concept of memory interfacing with the example to interface 8K RAM consecutively with microprocessor 8085. (CO3, CO4)

(b) Explain different addressing modes in 8086 with example. (CO3, CO4)

(c) Explain the functions of the following 8086 pins : (CO3, CO4)

(i) HOLD

(ii) CLK

(iii) MN/MX′

(iv) QS0 QS1

4. (a) Explain Flag register of 8086. (CO3)

(b) Write an 8086 assembly language program to convert a BCD number to its Binary code equivalent. (CO3)

(c) Explain the meaning of the following 8086 instructions : (CO3)

(i) DAS

(ii) AND BX, [DX]

(iii) LODSB

(iv) AAA

5. (a) What is the application of 8251 USART ? Explain with block diagram. (CO5, CO6)

(b) Program 8255 for the following configurations : (CO5, CO6)

To get data from Port B if input is even display number at port A if odd display number at port C.

(c) Describe block diagram of 8259. (CO5, CO6)

Roll No. .....

TEC–404

B. TECH. (FOURTH SEMESTER)

END SEMESTER EXAMINATION, June, 2023

ELECTROMAGNETIC FIELD THEORY

Time : Three Hours

Maximum Marks : 100

Note : (i) All questions are compulsory.

(ii) Answer any *two* sub-questions among (a), (b) and (c) in each main question.

(iii) Total marks in each main question are **twenty**.

(iv) Each sub-question carries 10 marks.

1. (a) Given vectors $\vec{T} = 2\hat{a}_x - 6\hat{a}_y + 3\hat{a}_z$ and $\vec{S} = \hat{a}_x + 2\hat{a}_y + \hat{a}_z$. Determine the vector projection of $\vec{S}$ on $\vec{T}$ and a unit vector perpendicular to both $\vec{S}$ and $\vec{T}$. (CO1)

(b) If $\vec{P} = 2\hat{a}_x - \hat{a}_y + \hat{a}_z$, $\vec{Q} = \hat{a}_x + \hat{a}_y + \hat{a}_z$ and $\vec{R} = 2\hat{a}_x + 3\hat{a}_z$. Determine the scalar triple product and vector triple product. (CO1)

(c) Let $\vec{D} = 2\rho z^2 \hat{a}_\rho + \rho \cos^2 \phi \hat{a}_z$. Determine following volume integration :

$$\iiint \nabla \cdot \vec{D}\, dv$$

over the region $0 \le \rho \le 5, -1 \le z \le 1, 0 < \phi < 2\pi$.

P. T. O.

2. (a) Determine electric field due to infinite line charge and infinite sheet of charge with help of Gauss law. (CO2)

(b) Define the term polarization for a uniform plane wave propagating in free space. Explain different type of polarizations in brief. (CO2)

(c) In a certain region, the electric flux density is given by :

$$\bar{D} = 2\rho(z+1)\cos\varphi\,\hat{a}_\rho - \rho(z+1)\hat{a}_\varphi + \rho^2\cos\varphi\,\hat{a}_z\ \mu\ C/m^2$$

(i) Find the charge density.

(ii) Calculate the total charge enclosed by the volume $0 < \rho < 2$, $0 < \varphi < \pi/2, 0 < z < 4$. (CO2)

3. (a) What is Ampere Law ? Why the modification in Ampere law was made ? Determine Maxwell's forth equation with this modification.

(CO3, CO6)

(b) Write the Maxwell's equation in differential and integral form. Also write the Maxwell's equation for charge free region (both differential and integral) and steady field (both differential and integral) and steady field (both differential and integral). (CO3, CO6)

(c) An infinitely long filamentary wire carries a current of 2 A in the $+z$ direction. Calculate (i) $\vec{B}$ at $(-3, 4, 7)$ (ii) the flux through the square loop described by $2 \le \rho \le 6, 0 \le z \le 4, \varphi = 90°$. (CO3, CO6)

4. (a) What is your understanding about quarter wave transformer ? Show that with the help of quarter wave transformer the impedance of transmission line and load can be matched. (CO4, CO6)

(b) Define skin depth and write its value in case of good conductor. In a medium $\vec{E} = 16e^{-0.05x}\sin(2\times10^8 t - 2x)\hat{a}_z$ V/m find the propagation constant, wavelength, speed of wave and skin depth. (CO4, CO6)

(c) If $\mu = 10\,\mu_0$ for region $1(0 < \varphi < \pi)$ and $\mu = 10\,\mu_0$ for region $(0 < \varphi < \pi)$ and $\vec{B}_2 = 10\,\hat{a}_\rho + 15\,\hat{a}_\phi - 20\,\hat{a}_z$ mWb/m^2. Calculate (i) $\vec{B}_1$ (ii) the energy densities in the two medium. (CO4, CO6)

5. (a) What are the conditions of lossless and distortionless transmission line ? A lossless line is also a distortionless line but a distortion less line is not necessarily a lossless. Justify the statement. A distortionaless line operating at 120 MHz has R = 20 Ω/m, L = 0.3 μ H/m and C = 63 pF/m. Determine *y*, *u* and Z_0. (CO5)

(b) Define linear, isotropic and homogeneous medium. Also determine the continuity of current equation or just continuity equation by considering the principle of charge conservation. (CO5)

(c) What do you understand by TE, TM and TEM mode of parallel plate waveguide ? Draw the field lines for TEM, TE_1, and TM_1 for parallel plate waveguide. (CO5)

520

Roll No. .....

TEC–451

B. TECH. (ECE-ESR) (FOURTH SEMESTER)
END SEMESTER EXAMINATION, June, 2023

INTRODUCTION TO ROBOTICS

Time : Three Hours

Maximum Marks : 100

Note : (i) All questions are compulsory.

(ii) Answer any ***two*** sub-questions among (a), (b) and (c) in each main question.

(iii) Total marks in each main question are **twenty**.

(iv) Each sub-question carries 10 marks.

1. (a) Describe and explain major components of robot in detail. (CO1)

   (b) Explain the working of robot manipulator and end effector. (CO1)

   (c) Explain the *three* laws of robotics. Differentiate between sensors and actuators with examples. (CO1)

2. (a) Derive an expression of peak time (t_p) for unit step response in second order system. (CO2)

   (b) Explain Linear Variable Differential Transformer (LVDT). (CO2)

   (c) What is the effect of the "derivative" component in PID control ? (CO2)

P. T. O.

3. (a) Explain the working of LED and photodetector with the help of energy band diagram. (CO3)

(b) Explain Hall effect sensors in detail with proper diagram. (CO3)

(c) Explain the working of potentiometer with the help of a suitable diagram. (CO3)

4. (a) Explain about forward and inverse kinematics of manipulator in detail. (CO4, CO6)

(b) Explain about robot dynamics in detail. (CO4, CO6)

(c) Explain about the following terms in detail : (CO4, CO5)

(i) Degree of freedom

(ii) Description

(iii) Configuration

5. (a) A point a_{uvw} = (4, 3, 2) is attached to a rotating frame, which was obtained by rotating 60 degrees about OZ-axis of the reference frame (x, y, z-frame). Find the coordinates of the point relative to the reference frame. (CO4, CO5)

(b) Write a short note on Homogeneous Transformation. (CO4, CO5)

(c) Explain about sensing and digitizing function in machine vision. (CO4, CO5)

50

Roll No. .....

TEC–491

B. TECH. (ECE-IOT) (FOURTH SEMESTER)
END SEMESTER EXAMINATION, June, 2023

SENSORS AND SIGNAL CONDITIONING

Time : Three Hours

Maximum Marks : 100

Note : (i) All questions are compulsory.

(ii) Answer any ***two*** sub-questions among (a), (b) and (c) in each main question.

(iii) Total marks in each main question are **twenty**.

(iv) Each sub-question carries 10 marks.

1. (a) Explain different types of sensors and process to measure the signals in measurement system. (CO1)

   (b) Describe the input-output configuration of measurement system with figure. (CO1)

   (c) Describe the static and dynamic characteristics of sensor based measurement system. (CO1)

2. (a) Distinguish between conductors, semiconductors and dielectrics with diagram. (CO2)

(b) Explain piezoelectric sensor with its application in healthcare and industries. (CO2)

(c) Describe the torque sensor and acceleration sensor using figure and write its industrial application. (CO2)

3. (a) Explain Band pass filter and Band rejection filter with circuit diagram and frequency response. (CO3)

(b) Describe different types of filters used in interfacing of sensors with figure. (CO3)

(c) Describe the working of potential divider in interfacing of sensors and signal conditioning. (CO3)

4. (a) Describe resistance bias circuit and self-bias circuit with diagram. (CO4)

(b) What is Op-Amp. ? Explain different types of operational amplifier. (CO4)

(c) Explain instrumentation amplifier and its applications. (CO4)

5. (a) What is filter approximation ? What are the different types of filter approximations ? (CO5, CO6)

(b) Explain first order and second order active filters with diagram. (CO5, CO6)

(c) Describe cascade design and direct design of active filter. (CO5, CO6)

50